INSTRUMENT APPROACH CHART - ICAO

AD ELEV 13
HEIGHTS RELATED TO THR RWY 34L - ELEV 13

DOHA RADAR NORTH	121.100 / 121.625
DOHA RADAR SOUTH	120.675 / 119.150
DOHA APP EAST	124.775 / 120.600
DOHA APP WEST	119.725 / 125.125
DOHA DIRECTOR WEST	123.875 / 119.225
HAMAD TWR WEST	118.025 / 118.225

DOHA/Hamad Intl. (OTHH)
ILS RWY34L CAT II & III
ACFT CAT A B C D

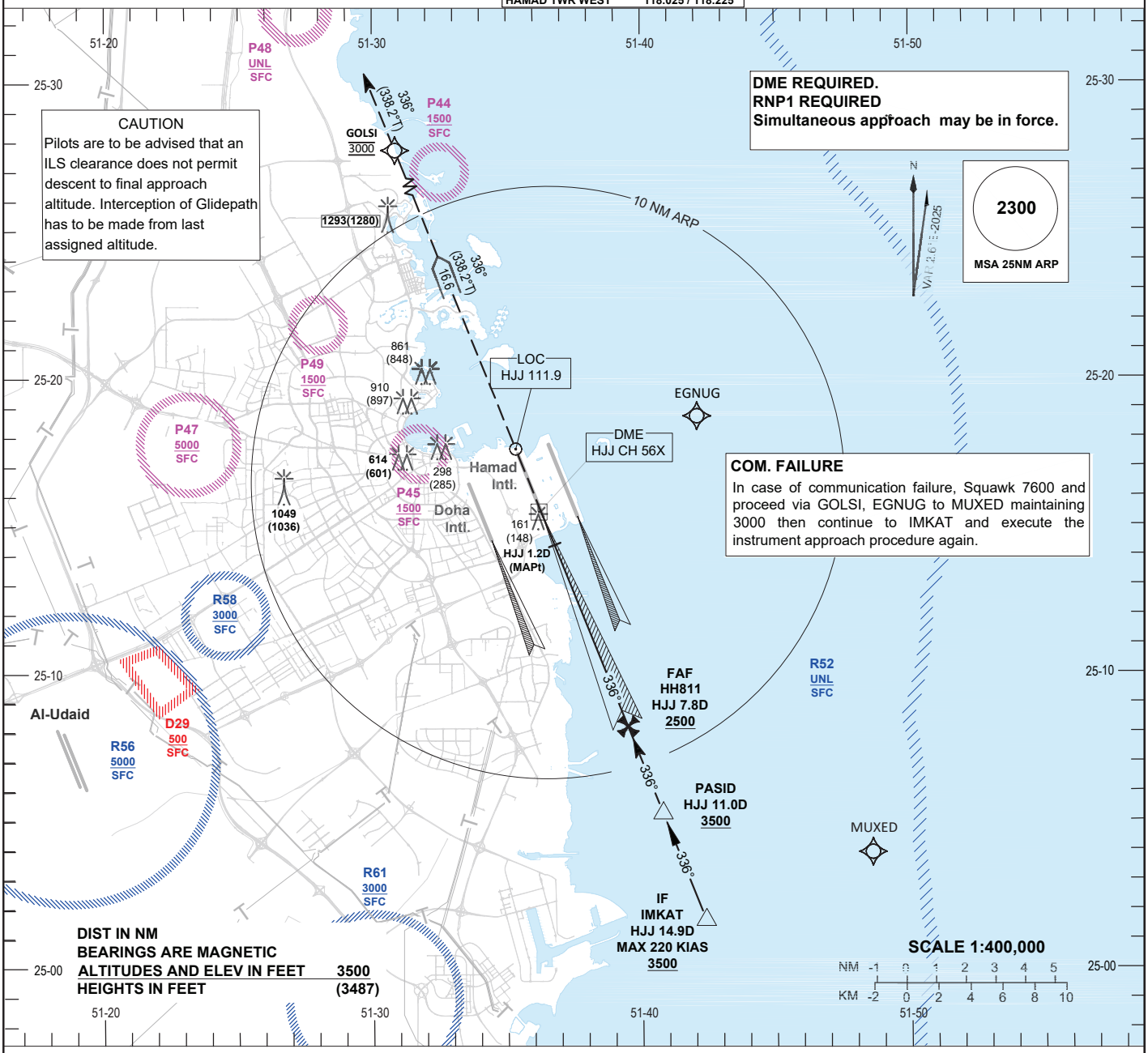

TA 13000

Missed Approach
Climb straight ahead to GOLSI at 3000, then continue on track 336° maintaining 3000 and expect RADAR vectors.

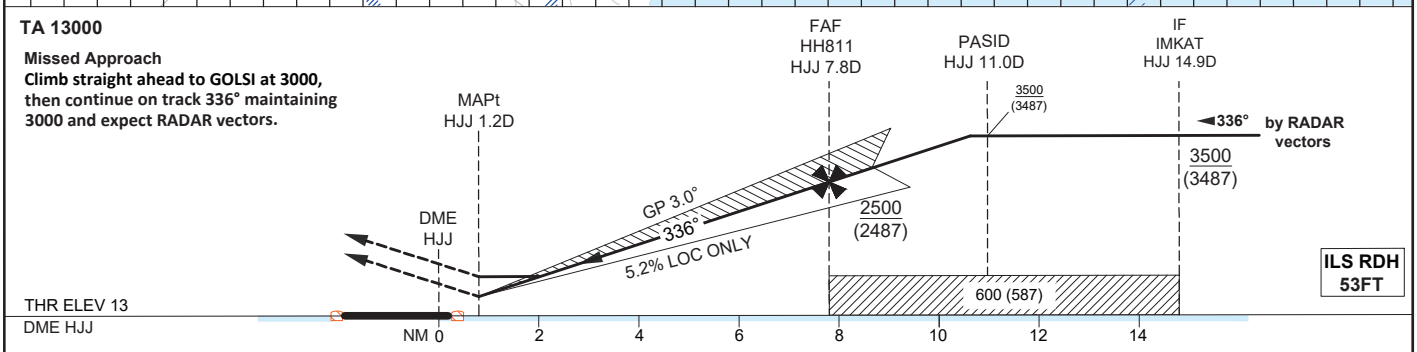

HJJ DME	1	2	3	4	5	6	7	8	9	10	11
ALT (5.2%)	340	660	970	1290	1610	1930	2250	2560	2890	3200	3500

OCA (OCH)		A	B	C	D
Straight in Approach	ILS CAT I	186 (173)	198 (185)	215 (202)	229 (216)
	ILS CAT II	79 (66)	92 (79)	103 (90)	122 (109)
	LOC ONLY	340 (327)			
Circling		620 (607)		1260(1247)	

1. Simultaneous approach may be in force.
2. HJJ DME Zero ranged at TDZ
3. Expect RADAR vectors to establish on final approach course at IMKAT (IF).
4. Expect Glide Path intercept at PASID at 3500 (3487).
5. CAT IIIA and CAT IIIB Approved.
6. *RNP 1 required in the Missed Approach.
7. In case of Missed Approach inform ATC immediately.

LOC ONLY Approach: MAPt at HJJ 1.2D							
Speed	KT	80	100	120	140	160	180
Time	MIN:SEC	Timing Not Authorized					
RATE OF DESCENT	FT/MIN	420	530	640	740	850	960

Change: Prohibited Area P48 upper limit. Magnetic variation. Chart renumbered.