INSTRUMENT APPROACH CHART - ICAO

AD ELEV 13
HEIGHTS RELATED TO THR RWY 16L - ELEV 13

DOHA RADAR NORTH	121.100 / 121.625
DOHA RADAR SOUTH	120.675 / 119.150
DOHA APP EAST	124.775 / 120.600
DOHA DIRECTOR EAST	119.400 / 121.125
HAMAD TWR EAST	118.525 / 118.225

DOHA/Hamad Intl. (OTHH)
ILS RWY16L CAT II & III
ACFT CAT A B C D

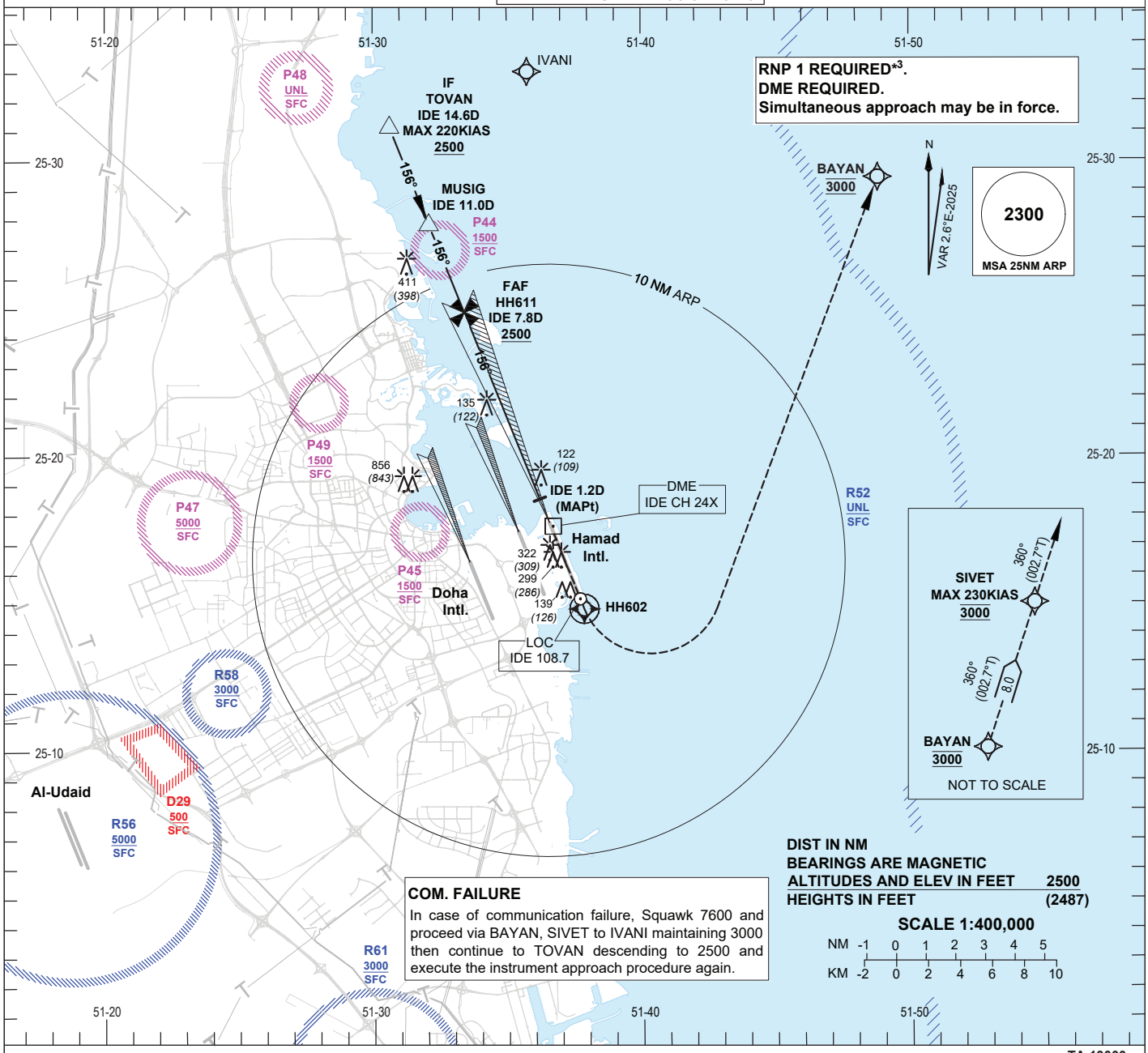

COM. FAILURE
In case of communication failure, Squawk 7600 and proceed via BAYAN, SIVET to IVANI maintaining 3000 then continue to TOVAN descending to 2500 and execute the instrument approach procedure again.

DIST IN NM
BEARINGS ARE MAGNETIC
ALTITUDES AND ELEV IN FEET 2500
HEIGHTS IN FEET (2487)

SCALE 1:400,000
NM -1 0 1 2 3 4 5
KM -2 0 2 4 6 8 10

TA 13000

Missed Approach
Climb straight ahead to HH602. When passing 1000 but not before HH602, turn left direct to BAYAN climbing to 3000.
Proceed on track to SIVET maintaining 3000.
Continue on track 360° and expect RADAR vectors.
Missed approach speed restriction 230 KIAS.

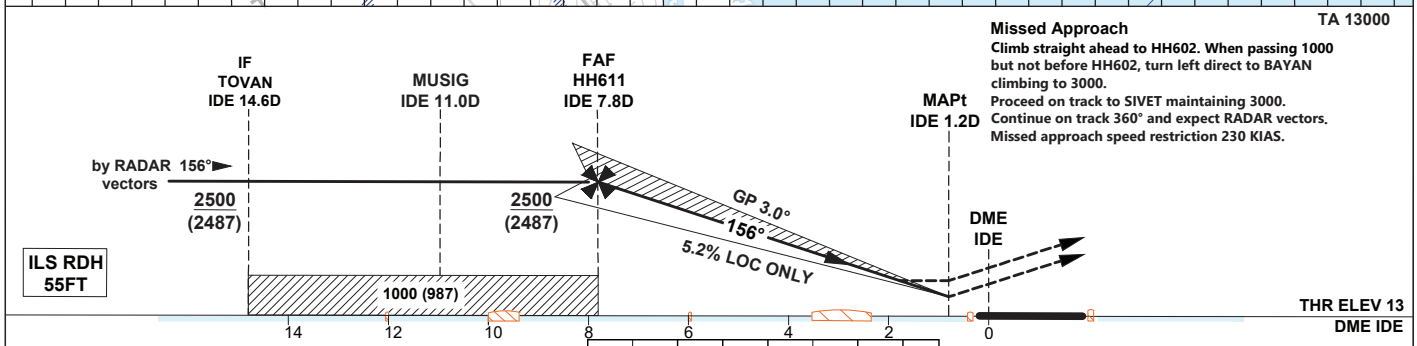

7.8	7	6	5	4	3	2	1	IDE DME
2500	2240	1920	1600	1280	970	650	330	ALT (5.2%)

OCA (OCH)		A	B	C	D
Straight in Approach	ILS CAT I	188 (175)	200 (187)	213 (200)	230 (217)
	ILS CAT II	108 (95)	119 (106)	130 (117)	147 (134)
	LOC ONLY	490 (477)			
Circling		620 (607)		1260 (1247)	

1. IDE DME Zero Ranged to TDZ.
2. CAT IIIA and CAT IIIB Approved.
3. *RNP 1 required in the Missed Approach.
4. In case of Missed Approach inform ATC immediately.

LOC ONLY Approach: MAPt at IDE 1.2D							
Speed	KT	80	100	120	140	160	180
Time	MIN:SEC	Timing Not Authorized					
RATE OF DESCENT	FT/MIN	420	530	640	740	850	960

Change: Minima for LOC Only.